Bearing unit UKP319 FYH

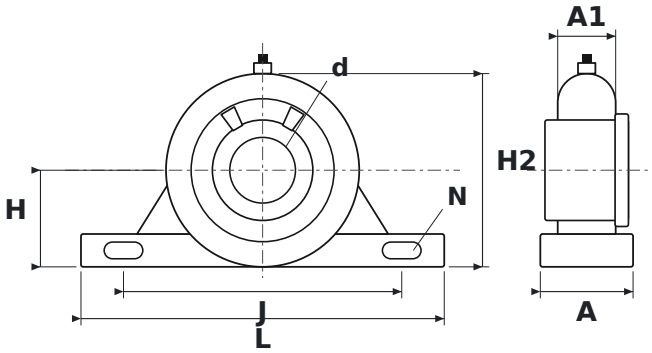

DIMENSIONS

d	shaft diameter	**85 mm**
L	housing length	**470 mm**
H	shaft centre height	**125 mm**
H2	total height	**250 mm**
J	bolt hole spacing	**360 mm**
N	bolt hole diameter	**36 mm**
A	housing width	**120 mm**
A1	upper housing width (at the bearing)	**75 mm**

SPECIFICATIONS

Manufacturer	**FYH**
Manufacturer designation	**UKP319**
Rolling elements	**single-row ball bearing**