Bearing unit UKT205 FYH

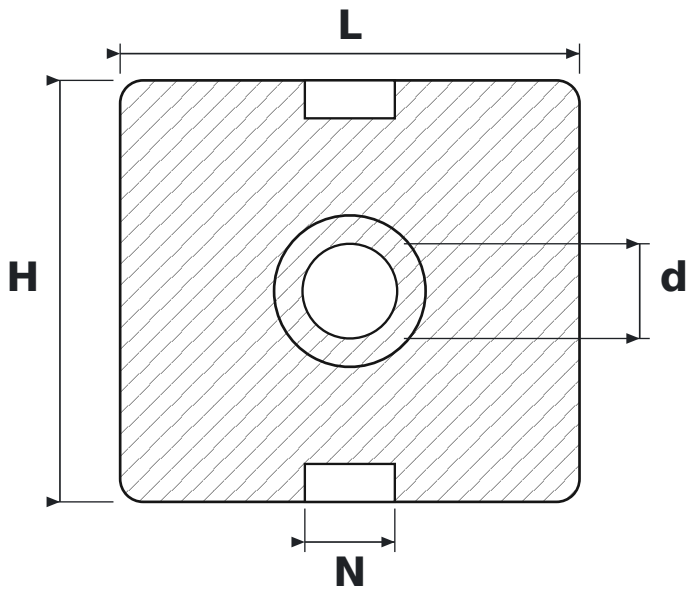

DIMENSIONS

d	shaft diameter	**20 mm**
L	housing length	**97 mm**
H	housing height	**89 mm**
N	guide slot width	**19 mm**

SPECIFICATIONS

Manufacturer	**FYH**
Manufacturer designation	**UKT205**
Rolling elements	**single-row ball bearing**