Bearing unit UKT206 J KOYO

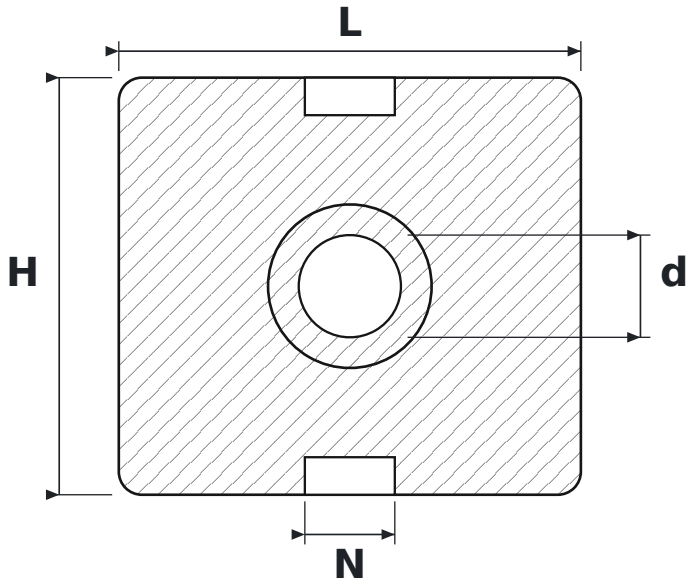

DIMENSIONS

d	shaft diameter	**25 mm**
L	housing length	**113 mm**
H	housing height	**102 mm**
N	guide slot width	**22 mm**

SPECIFICATIONS

Manufacturer	**KOYO**
Manufacturer designation	**UKT206 J**
Rolling elements	**single-row ball bearing**