Bearing unit UKT208 D1 NTN

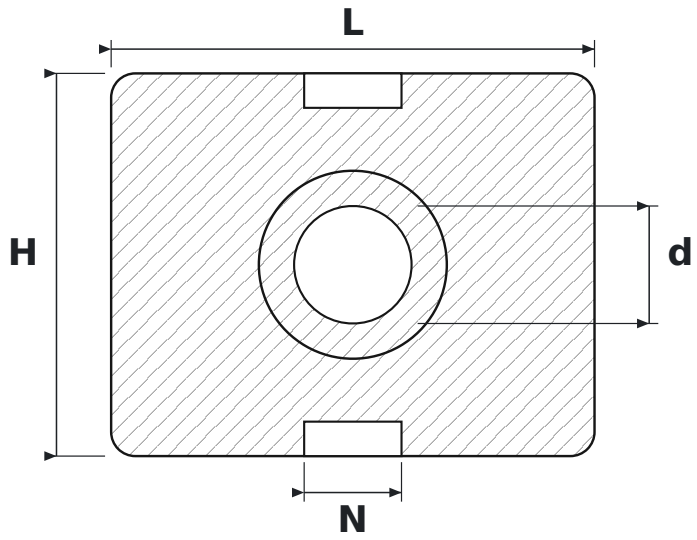

DIMENSIONS

d	shaft diameter	**35 mm**
L	housing length	**144 mm**
H	housing height	**114 mm**
N	guide slot width	**29 mm**

SPECIFICATIONS

Manufacturer	**NTN**
Manufacturer designation	**UKT208 D1**
Rolling elements	**single-row ball bearing**
Mass	**2.27 kg**