Bearing unit UKT208 J KOYO

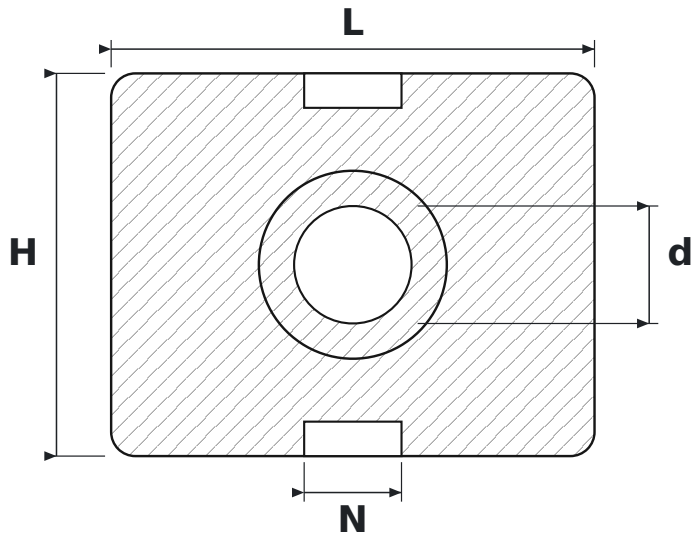

DIMENSIONS

d	shaft diameter	**35 mm**
L	housing length	**144 mm**
H	housing height	**114 mm**
N	guide slot width	**29 mm**

SPECIFICATIONS

Manufacturer	**KOYO**
Manufacturer designation	**UKT208 J**
Rolling elements	**single-row ball bearing**