Bearing unit UKT208 D1+H2308 RHP

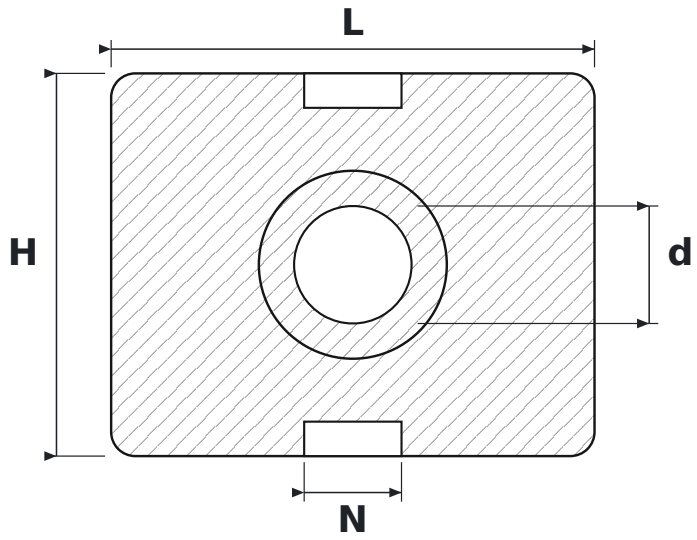

DIMENSIONS

d	shaft diameter	**35 mm**
L	housing length	**144 mm**
H	housing height	**114 mm**
N	guide slot width	**29 mm**

SPECIFICATIONS

Manufacturer	**RHP**
Manufacturer designation	**UKT208 D1+H2308**
Rolling elements	**single-row ball bearing**