Bearing unit UKT210 J KOYO

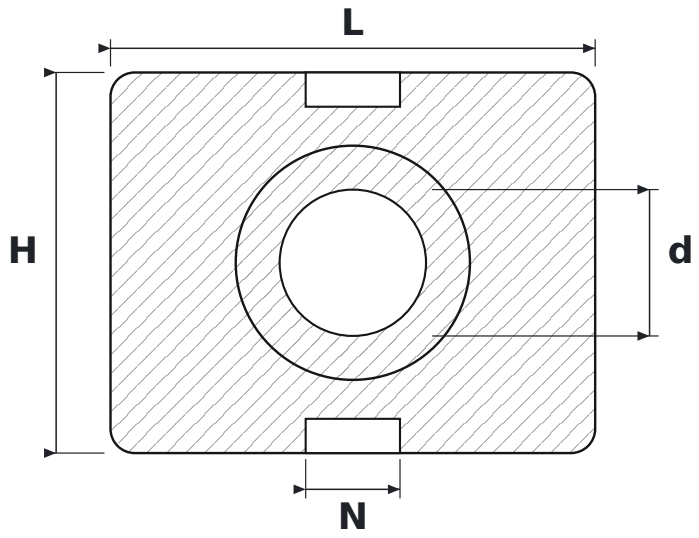

DIMENSIONS

d	shaft diameter	**45 mm**
L	housing length	**149 mm**
H	housing height	**117 mm**
N	guide slot width	**29 mm**

SPECIFICATIONS

Manufacturer	**KOYO**
Manufacturer designation	**UKT210 J**
Rolling elements	**single-row ball bearing**