Bearing unit UKT212 D1 NSK

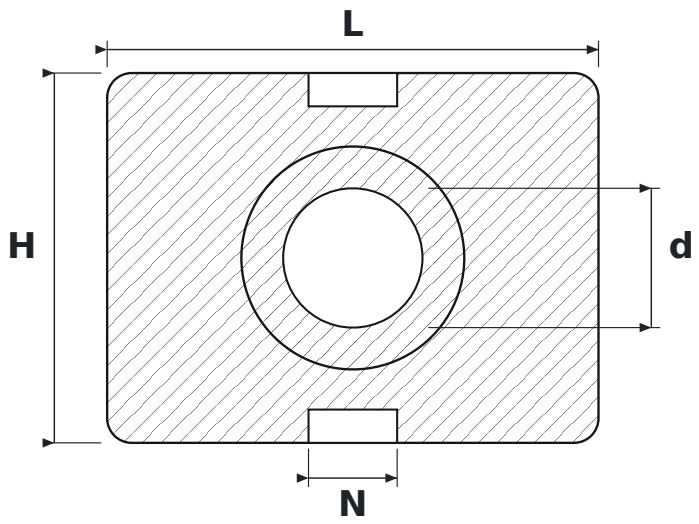

DIMENSIONS

d	shaft diameter	**55 mm**
L	housing length	**194 mm**
H	housing height	**146 mm**
N	guide slot width	**35 mm**

SPECIFICATIONS

Manufacturer	**NSK**
Manufacturer designation	**UKT212 D1**
Rolling elements	**single-row ball bearing**