Bearing unit UKT213 D1+H2313 RHP

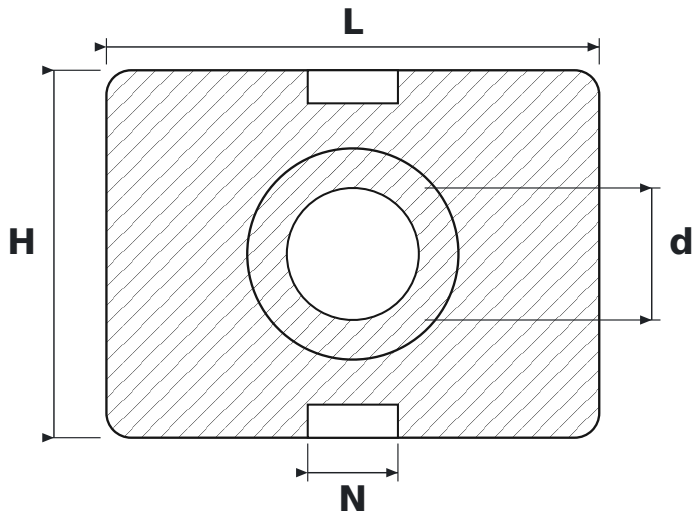

DIMENSIONS

d	shaft diameter	**60 mm**
L	housing length	**224 mm**
H	housing height	**167 mm**
N	guide slot width	**41 mm**

SPECIFICATIONS

Manufacturer	**RHP**
Manufacturer designation	**UKT213 D1+H2313**
Rolling elements	**single-row ball bearing**